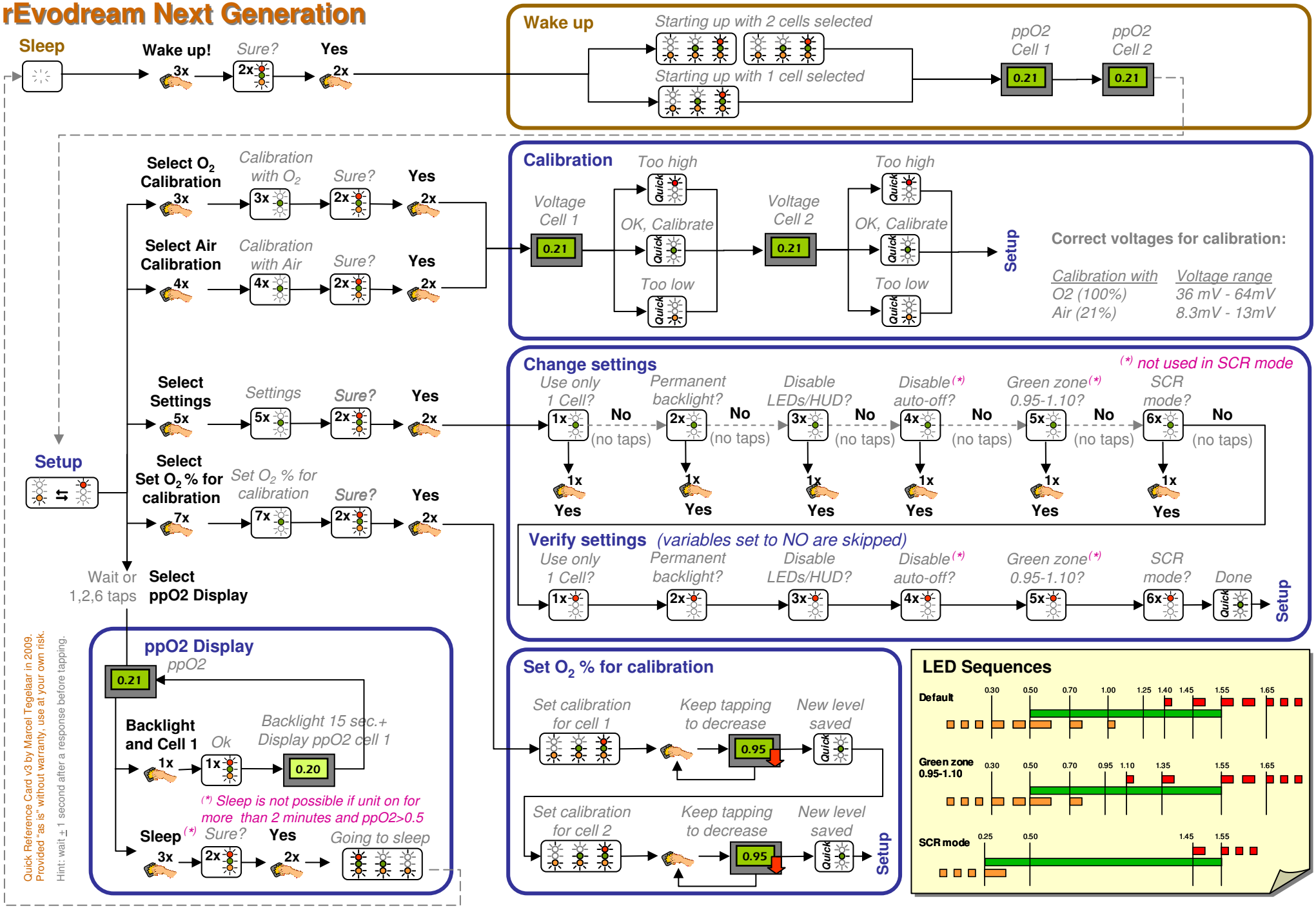rEvodream Next Generation